CS & IT ENGINEERING

Digital Logic

Sequential Circuit

Lecture No. 9

By- Aditya sir

Recap of Previous Lecture

Topic

Asynchronous Counters :

- Ripple
  - Up
  - Down

Topics to be Covered

Topic

Sequential Circuit

→ Ripple Counter Adv.

→ K-map with a variable.

About Aditya Jain sir

1. Appeared for GATE during BTech and secured AIR 60 in GATE in very first attempt - City topper
2. Represented college as the first Google DSC Ambassador.
3. The only student from the batch to secure an internship at Amazon. (9+ CGPA)
4. Had offer from IIT Bombay and IISc Bangalore to join the Masters program
5. Joined IIT Bombay for my 2 year Masters program, specialization in Data Science
6. Published multiple research papers in well known conferences along with the team
7. Received the prestigious excellence in Research award from IIT Bombay for my Masters thesis
8. Completed my Masters with an overall GPA of 9.36/10
9. Joined Dream11 as a Data Scientist
10. Have mentored 12,000+ students & working professions in field of Data Science and Analytics
11. Have been mentoring & teaching GATE aspirants to secure a great rank in limited time
12. Have got around 27.5K followers on Linkedin where I share my insights and guide students and professionals.

@ADITYASIR_PW

Telegram Link for Aditya Jain sir: https://t.me/AdityaSir_PW

In general: in Ripple Counter

→ all the **clocks** will be of same type.

+ve edge
-ve edge
⋮

Shortcut:

-ve → Up

+ve → Down

Topic : Sequential Circuit

-ve -> Up

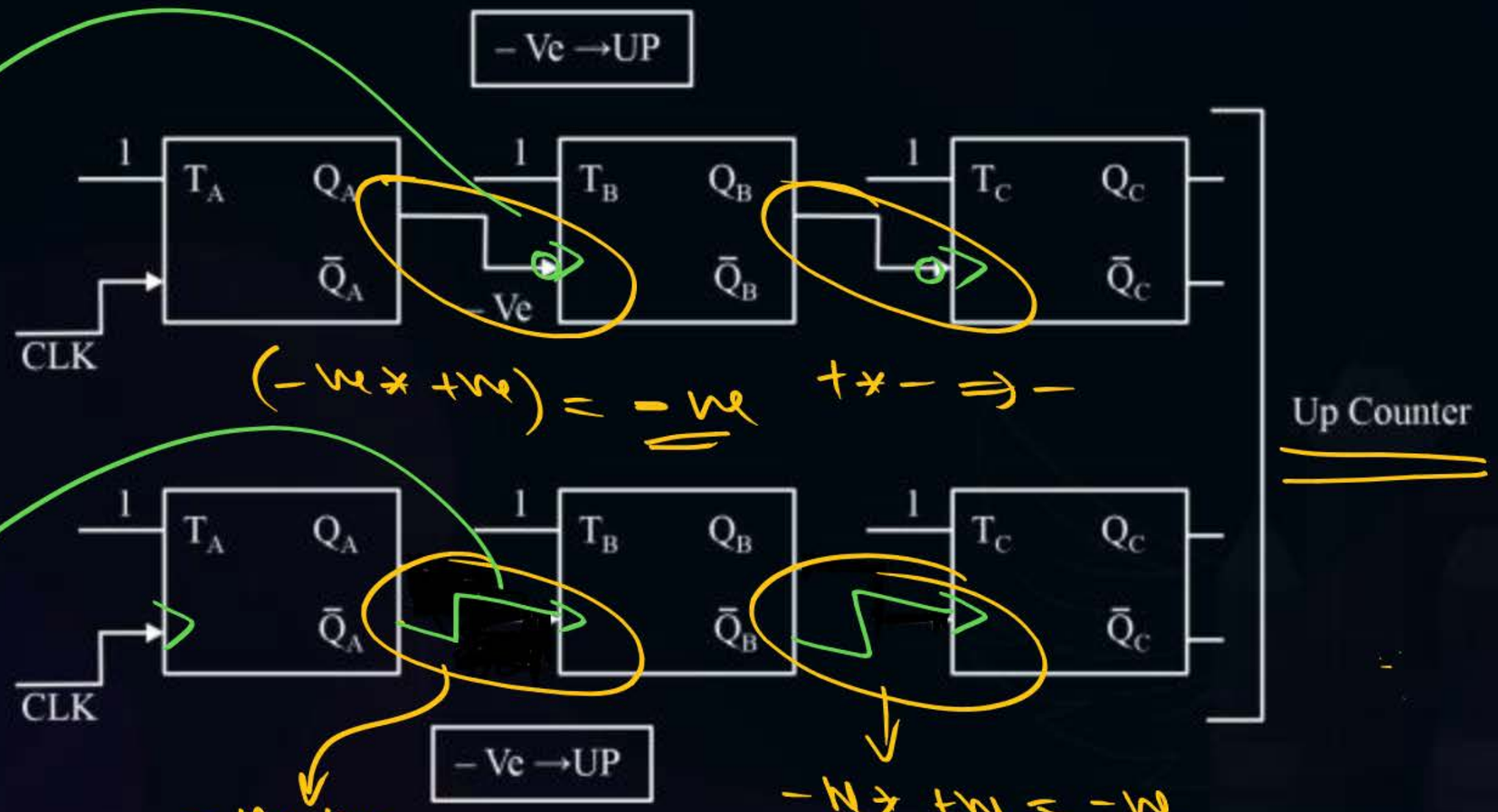

-ve edge Trigg

(-ve * +ve) = -ve

+ve * - => -

+ve edge trigg

- ve * +ve = -ve

-ve * +ve = -ve

Topic : Sequential Circuit

+ve → Down

+ve edge Trigg

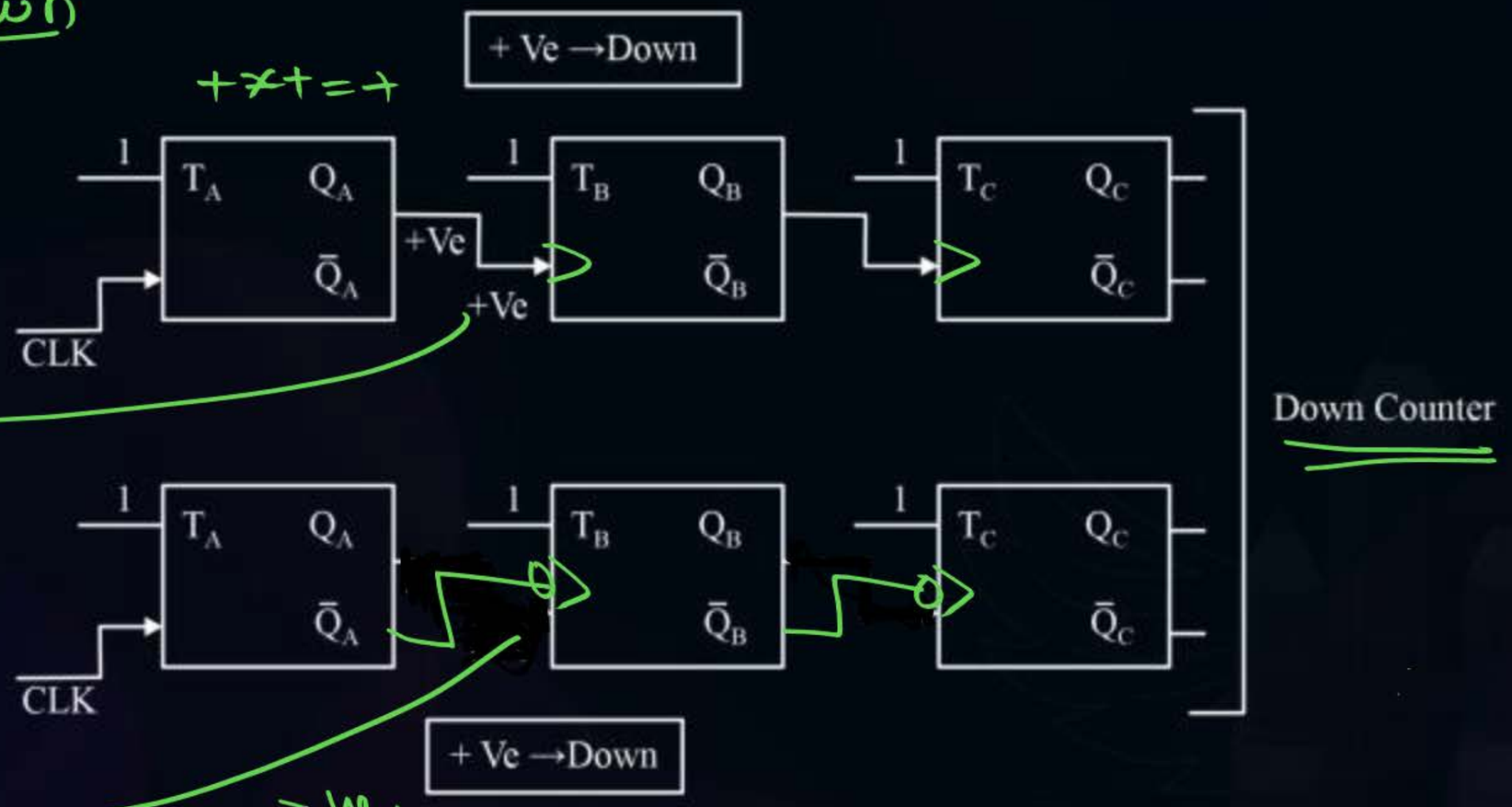

-ve edge triggered

-ve × -ve = +ve

$m \le 2^n$

in general

Full mode Counter $\Rightarrow$ {when all the states are used by the counter.}

$\Downarrow$

$MOD(m) = 2^n$

$\boxed{n = \text{no. of FF}}$

$n = 3$ $\quad MOD = 2^n = \underline{8}$

$n = 4$ $\quad MOD = 2^n = 16$

$n = 5$ $\quad MOD = 2^n = 2^5 = 32$

$2^4 = 16$

(Q) Create a MOD 16 Up Counter in which Q is used as the clock?

Up ⟹ -ve

Shortcut:

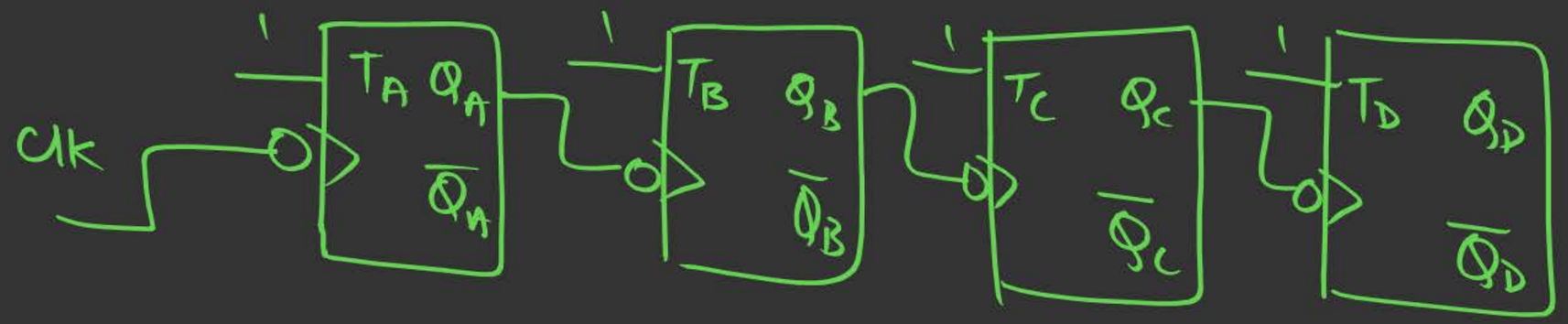

Topic : Sequential Circuit

Feedback reduces the number of states. in use.

MOD

3FF → MOD-8

Topic : Sequential Circuit

RESET clear

[without needing clock]

(within the same clock)

Clear enabled

Topic : Sequential Circuit

Preset

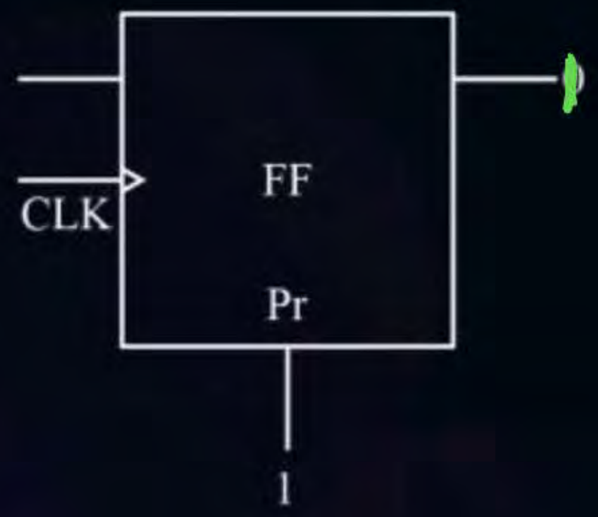

Topic : Feedback Reduces the Number of State

MOD-5 Up Ripple Counter

-ve → Up

Clock is -ve edge Triggered

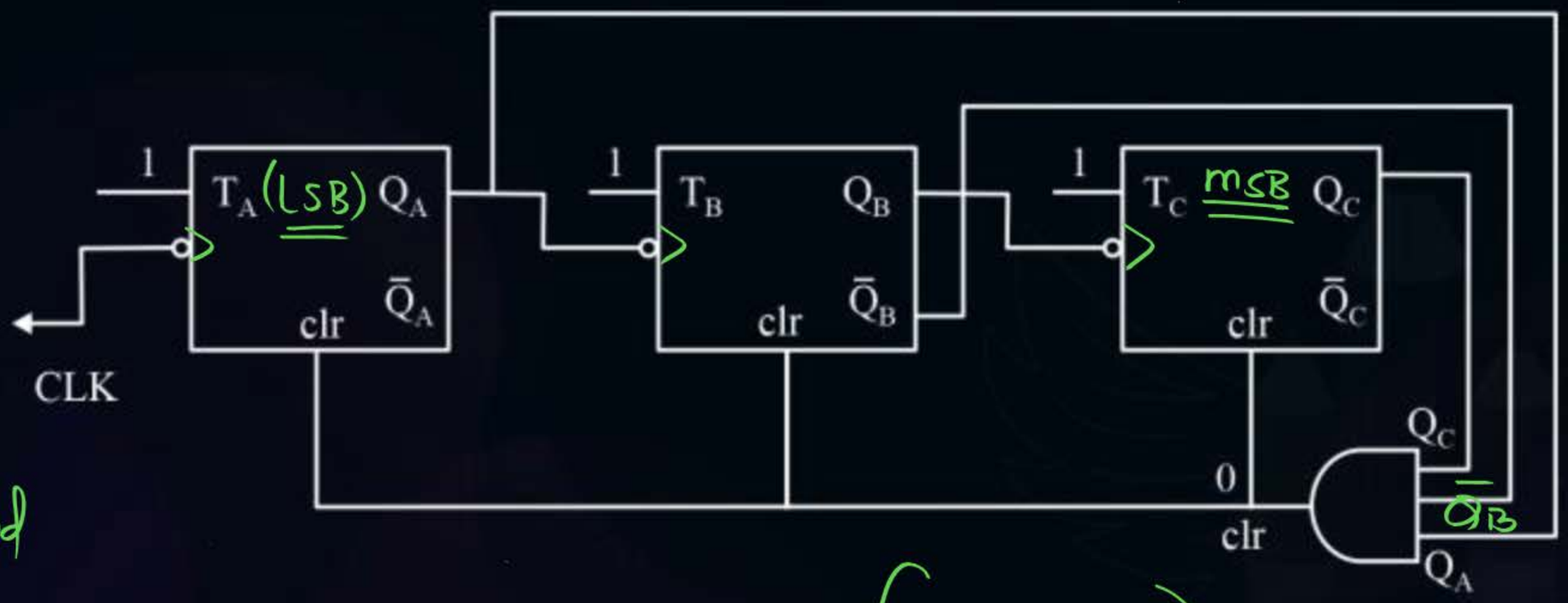

$$Clr = (Q_C \cdot \overline{Q_B} \cdot Q_A)$$

Topic : Feedback Reduces the Number of State

CLK	Q_C	Q_B	Q_A	$CLR = Q_C\overline{Q}_BQ_A$
0	0	0	0	0
1	0	0	1	0
2	0	1	0	0
3	0	1	1	0
4	1	0	0	0
5	~~1~~ 0	~~0~~ 0	~~1~~ 0	~~1~~ 0
6	0	0	1	0
7	0	1	0	0
8	0	1	1	0

Initial

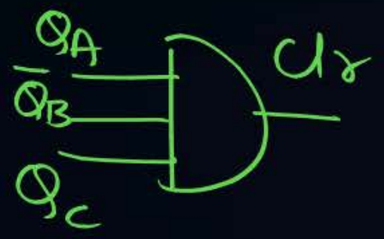

$clr = Q_C\overline{Q}_BQ_A$

000
001
010
011
100

MOD 5

when clr = 0, works as a usual counter.

Shortcut :-

$$Clr = Q_C \cdot \overline{Q_B} \cdot Q_A$$

minterm :-

$$\underbrace{1 \quad 0 \quad 1}$$

$$\Downarrow$$

$$5$$

MOD-5

0, 0

Topic : Sequential Circuit

MOD-6 UP Ripple Counter

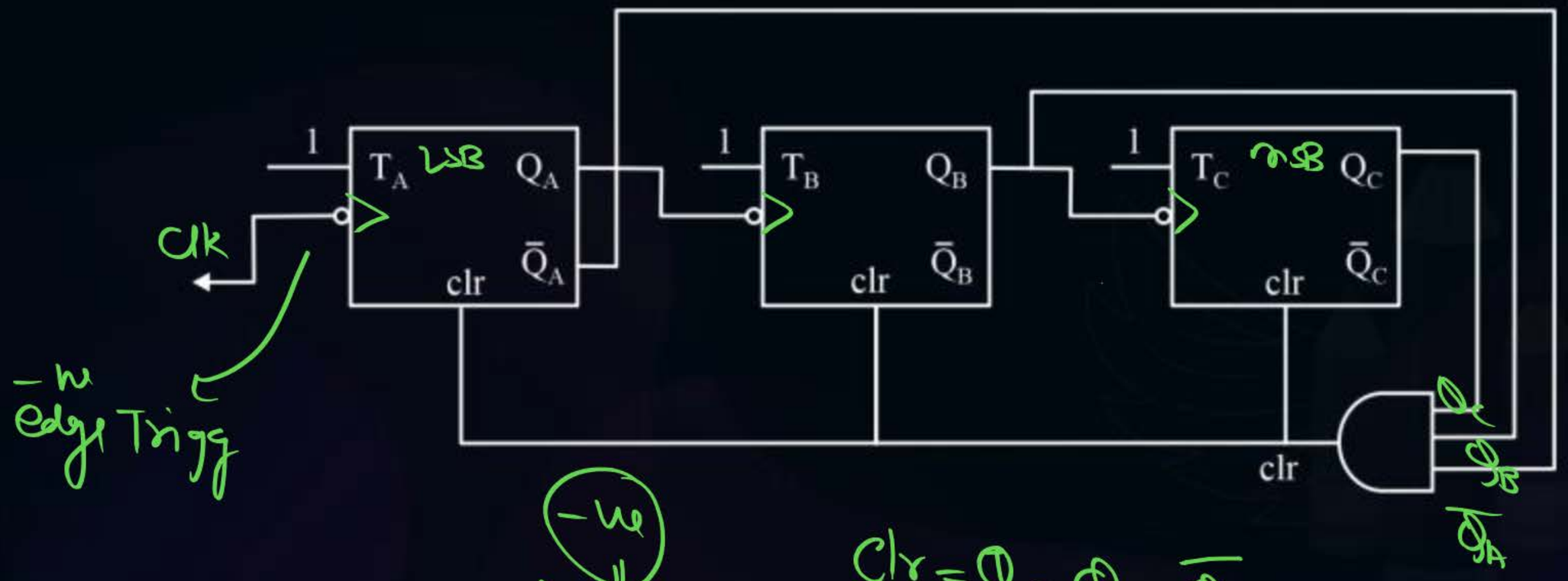

-ve

Up

$Clr = Q_C \cdot Q_B \cdot \overline{Q_A}$

Topic : Sequential Circuit

MOD-6 UP RIPPLE COUNTER→

initial

CLK	Q_C	Q_B	Q_A	CLR
0	0	0	0	0
1	0	0	1	0
2	0	1	0	0
3	0	1	1	0
4	1	0	0	0
5	1	0	1	0
6	~~1~~ 0	~~1~~ 0	~~0~~ 0	~~1~~ 0
7	0	0	1	0
8	0	1	0	0

$\rightarrow Q_C \cdot Q_B \cdot \overline{Q_A}$

$Clr = 1 \cdot 1 \cdot \overline{0}$

$= 1$

000
001
010
011
100
101

Shortcut:

$$Clr = Q_C\, Q_B\, \overline{Q}_A$$

minterm ⇒ 1 1 0

↓

6

MOD-6

Topic : Sequential Circuit

MOD-9 Up Ripple Counter

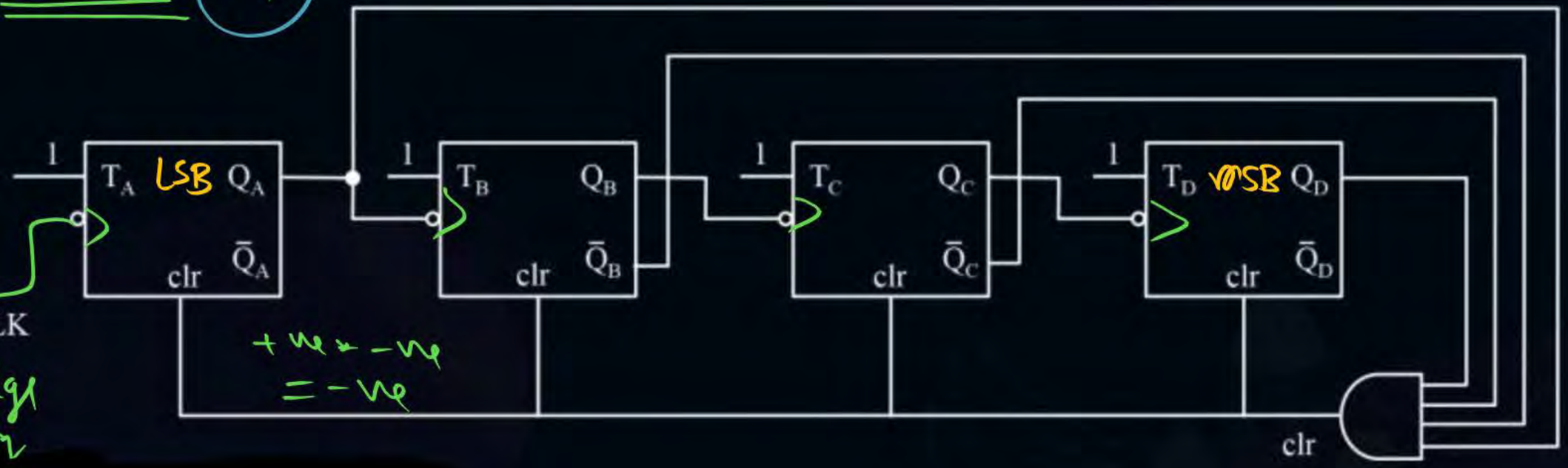

-ve edge Trigger

$Clr = Q_D \cdot \bar{Q}_C \cdot \bar{Q}_B \cdot Q_A$

Topic : Sequential Circuit

initial

CLK	Q_D	Q_C	Q_B	Q_A	CLR
0	0	0	0	0	0
1	0	0	0	1	0
2	0	0	1	0	0
3	0	0	1	1	0
4	0	1	0	0	0
5	0	1	0	1	0
6	0	1	1	0	0
7	0	1	1	1	0
8	1	0	0	0	0
9	~~1~~ 0	~~0~~ 0	~~0~~ 0	~~1~~ 0	~~1~~ 0
10	0	0	0	1	0
11	0	0	1	0	0

0 → 1 → 2 → 3 → 4 → 5 → 6 → 7 → 8 → 0

$Q_D \overline{Q_C}\, \overline{Q_B}\, Q_A$

$1 \cdot \overline{0} \cdot \overline{0}\, 1$

$= 1 \cdot 1 \cdot 1 \cdot 1$

$= 1$

Shortcut:

$$clr = Q_D \cdot \overline{Q_C} \cdot \overline{Q_B} \cdot Q_A$$

$$\rightarrow \underbrace{1 \quad 0 \quad 0 \quad 1}_{9}$$

MOD-9

010

Shortcut

When to use shortcut :-

1. Clr = ANDs $(Q_D \cdot \overline{Q}_C \cdot Q_B \cdot Q_A)$
2. Up Ripple Counter

(Q) Design a BCD Ripple Counter

⇓

Up Counter

BCD

① MOD-10

② 0→1→2→3 ... →9

min FF: 4

Shortcut MOD-10

$Clr = Q_D \overline{Q_C} Q_B \overline{Q_A}$

1 0 1 0

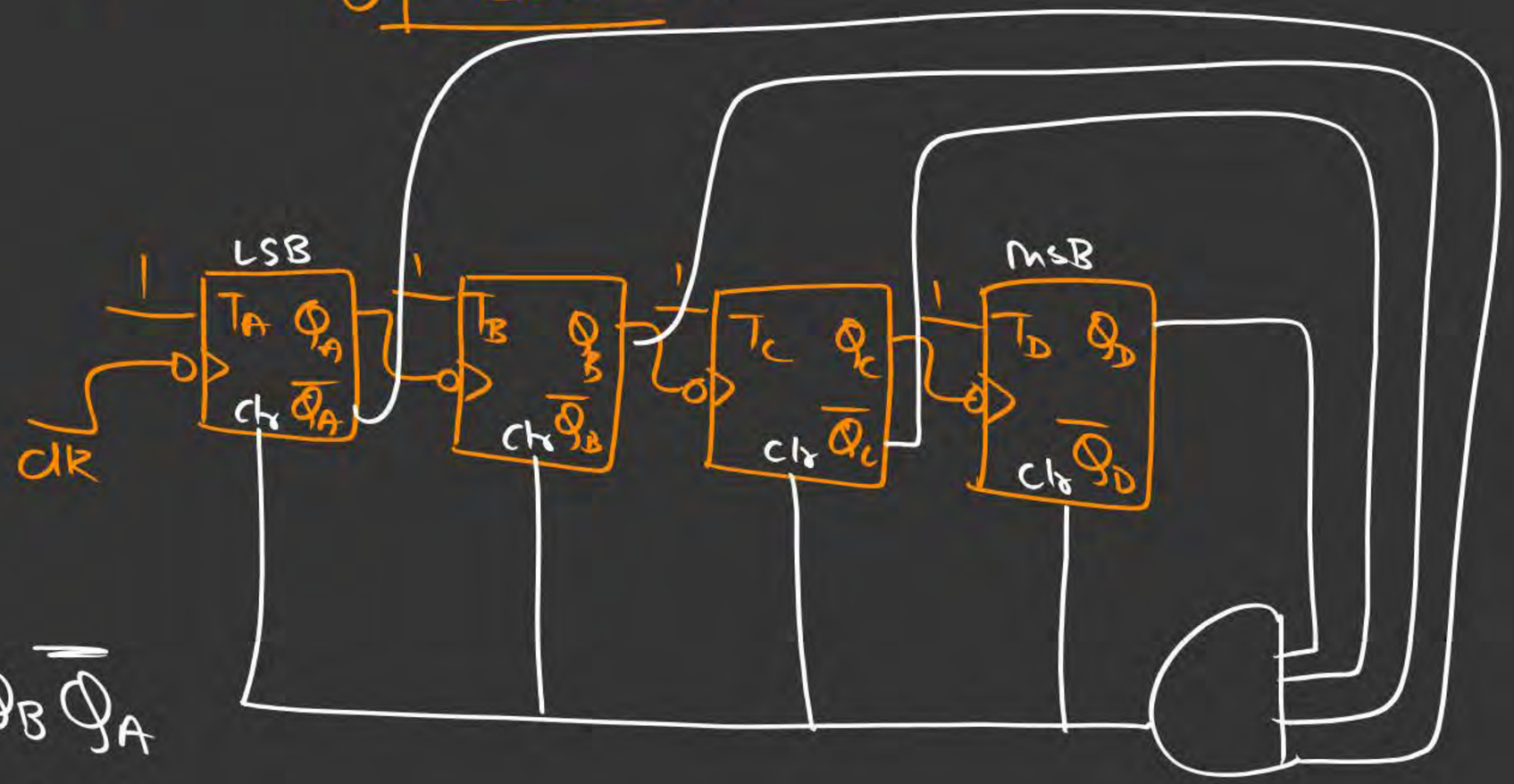

[MCQ]

#Q. Which type of counter is shown below?

H.W

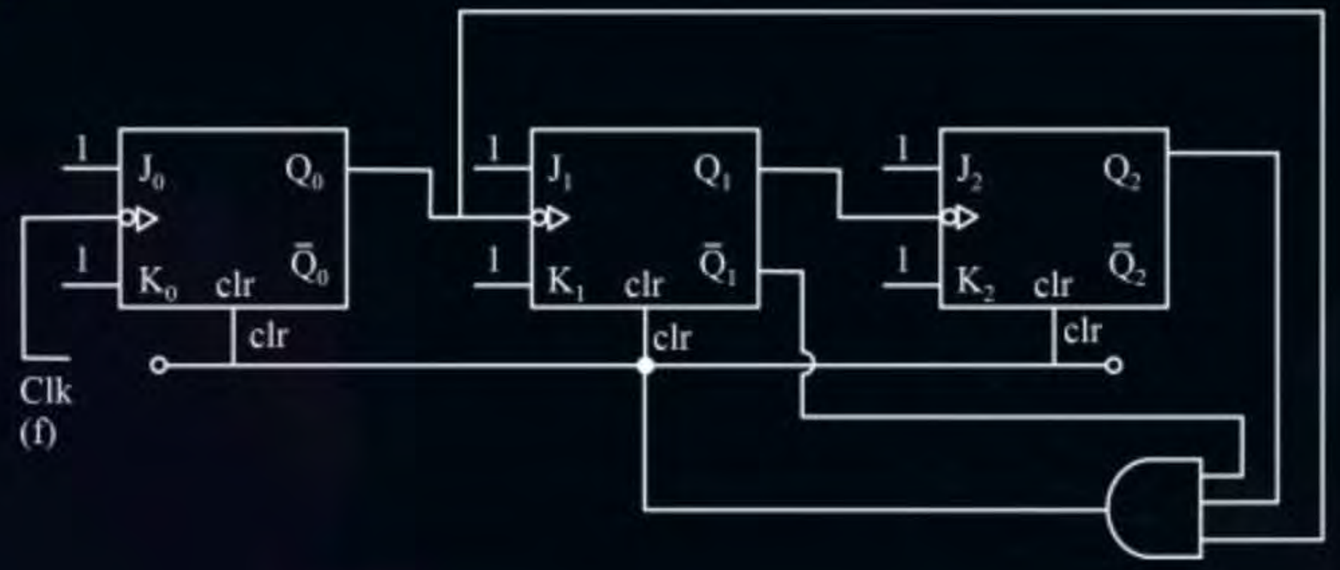

A. mod 5 down counter

B. mod 5 up counter

C. mod 6 up counter

D. mod 6 down counter

[MCQ]

HW2

#Q. Consider the following counter

In counter starts as 000, what will be the count after 13 clock pulses?

A. 100

B. 101

C. 110

D. 111

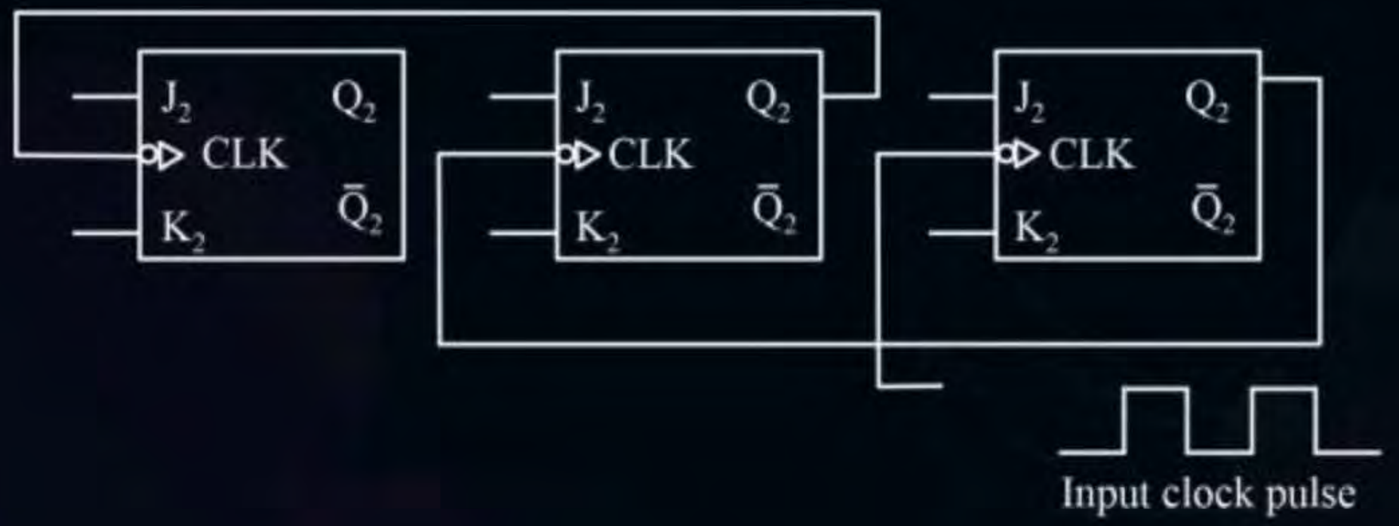

2 mins Summary

→ Asynchronous Counters

- Full mode
- Non Full mode

THANK - YOU